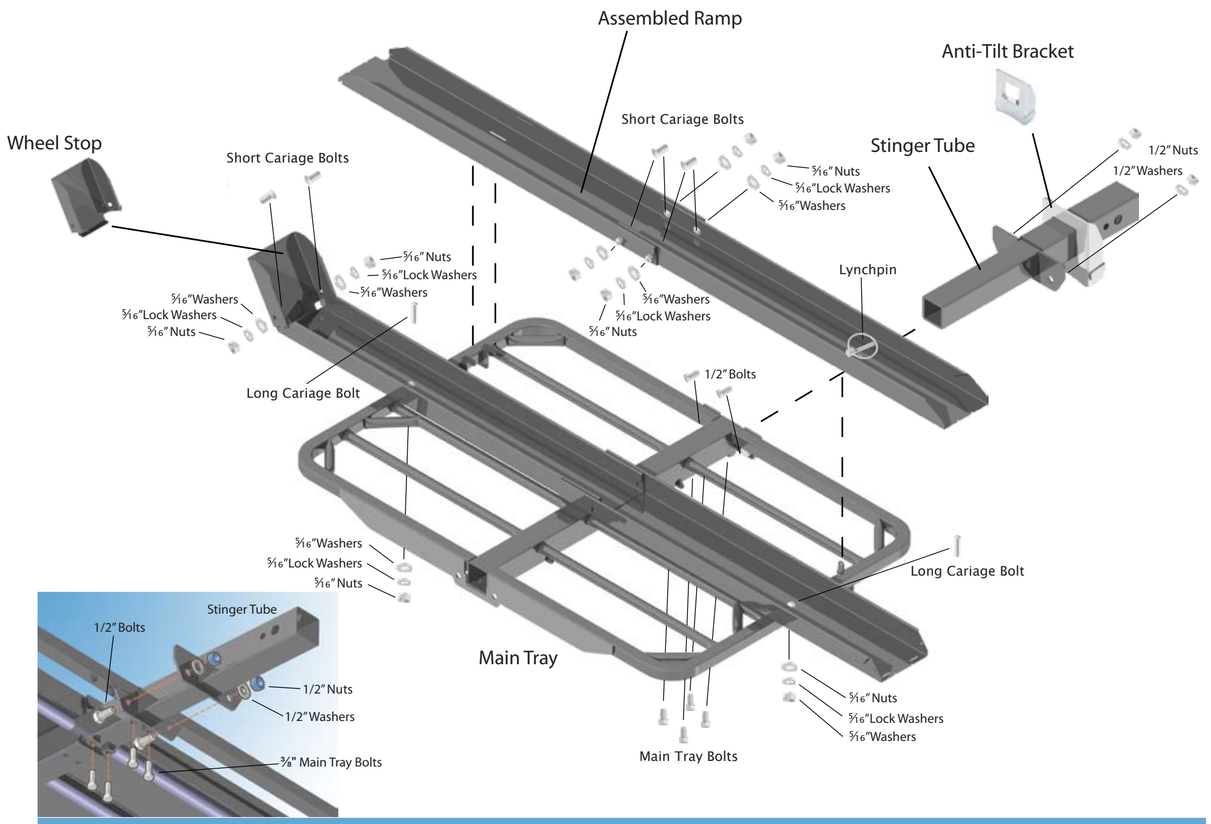

PARTS

NOTE: VersaHaul™ is attached with your standard Hitch Pin (not included).

Main Tray
VH019

Anti Tilt
Lock Bracket
VH070

Lynchpin
VH201

Wheel Stop
VH053

Class II
Stinger Tube
VH029C2

30" x 5"
Rail - Right
VH045B

30" x 5"
Ramp - Right
VH045D

30" x 5"
Rail - Left
VH045A

30" x 5"
Ramp - Left
VH045C

Class III
Stinger Tube
VH029C3

Main Tray Bolts x 4
3/8" x 1/2" Bolts
VH232

1/2" Bolts x 2
1/2" x 1" Bolts
VH244

Long Carriage Bolts
x 2
5/16" x 2" Bolts
VH227

Short Carriage Bolts
x 2
5/16" x 3/4" Bolts
VH224

5/16" Washer for
Carriage Bolts x 10
VH225

5/16" Lock Washer for
Carriage Bolts x 10
VH222

5/16" Nuts for
Carriage Bolts x 10
VH223

1/2" Washer for
1/2" Bolts x 2
VH245

1/2" Nuts for
1/2" Bolts x 2
VH242

TOOLS

9/16" Socket

3/4" Wrench

1/2" Wrench

⚠WARNING

1. Read all instructions for future reference.
2. Follow all warnings and instructions marked on the product.
3. Do not stand on the VersaHaul.™
4. Do not ride any vehicle while loading onto the VersaHaul.™
5. Always store the VersaHaul™ carrier in a safe place.
6. Never exceed vehicle tongue weight ratings.
7. Only use VersaHaul™ with Class 2, 3 or 4 hitch.*
8. Improper use, storage or installation of carrier could result in death or serious injury.
9. Do not put any VersaHaul™ on a 5th wheel trailer or any other kind of trailer.
10. **VH-50cc carrying capacity is limited to 250 lbs. max. Your vehicle suspension and hitch may limit the hauling capacity of the carrier.** For more information on vehicles and hauling capacities, visit www.versahaul.com.

* Most Class 3 Hitches limit the VersaHaul™ to 500 lbs . total hauling capacity, while most Class 2 Hitches limit it to 300 lbs.

LIMITED WARRANTY

The Limited Warranty on the VersaHaul™ Carrier.

BNK, INC warrants the carrier and related components. This warranty applies to any part found to be defective due to material and/or workmanship when inspected at the factory of BNK, Inc., Winamac, IN. BNK Inc. will, at its option, repair or replace defective parts to the original purchaser at no charge other than transportation. Sale receipt as proof of date of purchase is required, which will be returned. BNK, Inc. assumes no liabilty for labor charges made in performance of this warranty.

The warranty periods are as follows from date of purchase:

CARRIER FOR 1 YEAR, VOID IF: frame is broken or bent due to abuse. example: (underside scraped abusively)

ALL WARRANTIES ARE VOID IF: the carrier has been rented, used under abnormal conditions, or subjected to abuse, misuse, neglect, or improper maintenance.

All warranties should be handled at point of purchase unless other arrangements are made.

BNK, Inc. is not liable for any damage claim or liability cliam, personal or otherwise resulting from operation of this carrier in any way. All transportation charges for items returned for warranty evaluation and/or replacement are to be borne by the customer.

For one (1) year from the date of purchase, BNK, Inc. will repair or replace for the original purchaser, without charge, any part or parts are manufactured by BNK, Inc. and found, upon examination at our factory in Winamac, to be defective in materials and/or workmanship.

All transportation charges on parts submitted for replacement under this warranty must be borne by the purchaser. This warranty does not apply to parts not manufactured by BNK, Inc. Their manufacturer may warrant these items. This warranty does not apply to any part which has been damaged by accident, alteration, abuse, improper adjustment, normal wear, or any other cause beyond our control.

Use of replacement parts other than genuine BNK, Inc. parts may impair the safety of your machine and void this warranty.

IMPORTANT

THIS WARRANTY IS VOID UNLESS THE PRODUCT REGISTRATION CARD IS FILLED OUT COMPLETELY AND RETURNED TO THE FACTORY AT WINAMAC, IN. WITHIN TEN (10) DAYS OF PURCHASE.

OUR WARRANTY COVERS OUR PRODUCT FOR ONE YEAR. WE ARE NOT ABLE TO EXCHANGE USED VERSAHAUL™ CARRIERS FOR REFUNDS OR NEW CARRIERS.

Protected by U.S. Patents D528,064S; 20070052206
This document and all images contained within are © Copyright 2008 All Rights Reserved. Versahaul.com® is a registered trademark of BNK, Inc.

VersaHaul™

single scooter carrier

VH-50cc INSTRUCTION DIAGRAM

Step 1

Insert the appropriate Class II or Class III Stinger Tube into the Main Tray and secure it using the 1/2" Bolts with Washers and Nuts. Then fasten the 3/8" Main Tray Bolts securely under the Main Tray.

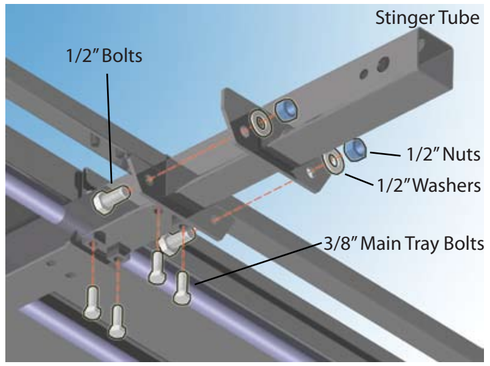

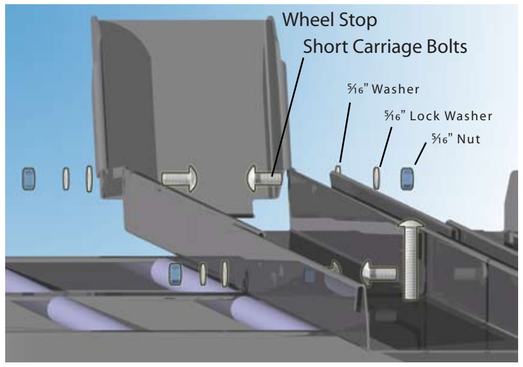

Step 2

Secure the Wheel Stop onto the Rail-Left using the Short Carriage Bolts. Next insert the Washer then the Lock Washer before bolting the Nut. Secure the Rail-Right onto the Rail-Left using the Short Carriage Bolts.

Step 3

Using the Long Carriage Bolts, secure the Assembled Rail onto the Main Tray by bolting the left and right side of the Main Tray. Insert the Washer then the Lock Washer before bolting the Nut.

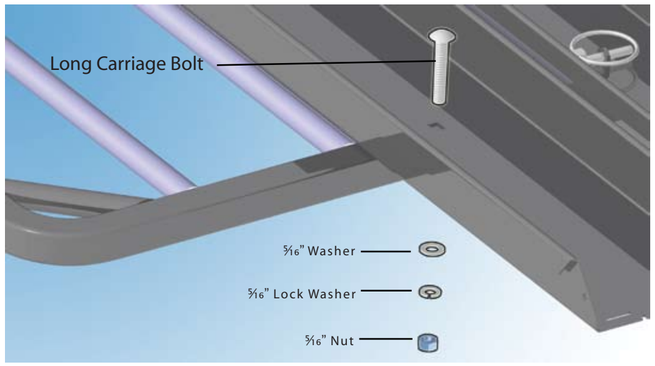

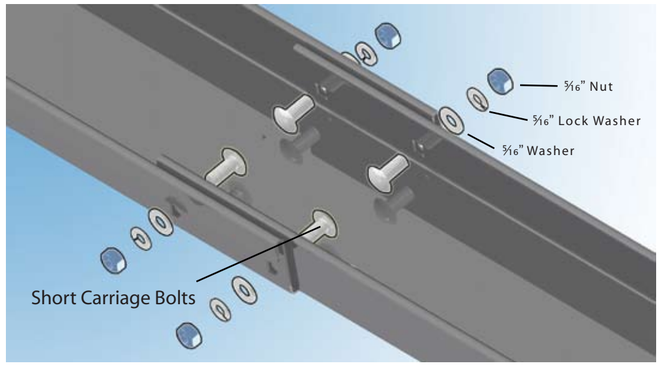

Step 4

Using the Short Carriage Bolts, bolt the Ramp-Left and Ramp-Right together. Insert the Washer then the Lock Washer before bolting the Nut.

Assembled VH-50cc Carrier

VH-50cc Carrier in Use

ATTACHING YOUR VERSAHAUL™

To attach the assembled VersaHaul to your class II, III or IV 2" receiver, first place the Anti-Tilt Lock Bracket as shown on the Main Tube. Be sure the flat side of the Bracket is facing the carrier. Insert the unit into your receiver. Insert hitch pin and on opposite side insert hair pin. Push the Lock Bracket all the way against the receiver then tighten all three 3/8" x 1 1/4" hex head bolts with the 9/16" Socket.

LOADING YOUR VERSAHAUL™

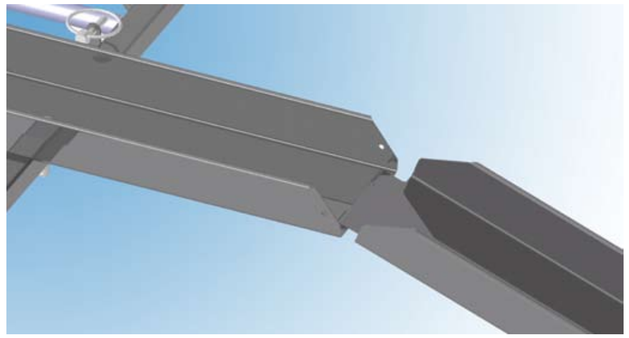

Hook the Assembled Ramp onto the Rail-Right on the Main Tray

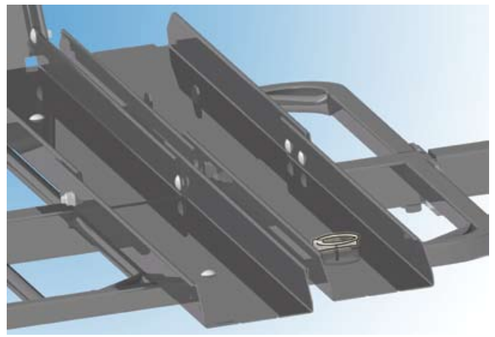

When not used, secure the Assembled Ramp onto the Main Tray's hooks and lock to the Ramp using the Lynchpin.

NOTE: WHEN ATTACHING STRAPS TO THE MAIN TRAY
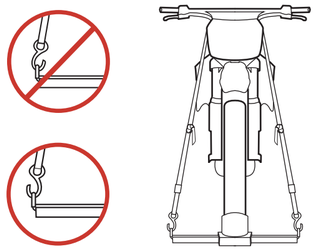
When attaching the tie down straps, securely hook the straps from the center of the handlebars to the diagonal bars in corners of the Main Tray. Be sure to evenly tighten the straps on both sides of the scooter. Do not hook the straps to the ends of the handlebars. Improper placement of the straps will lead to the scooter tipping.